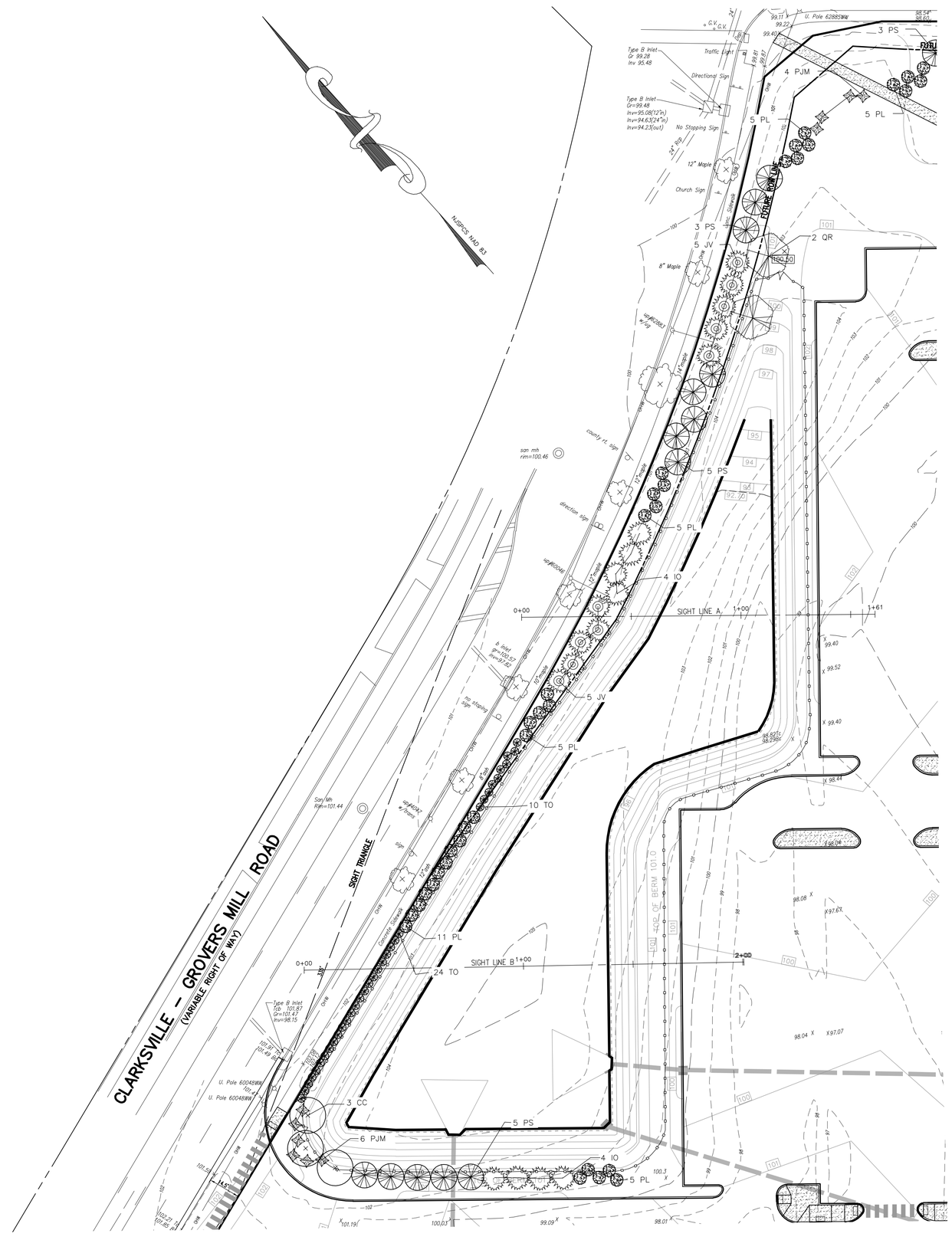

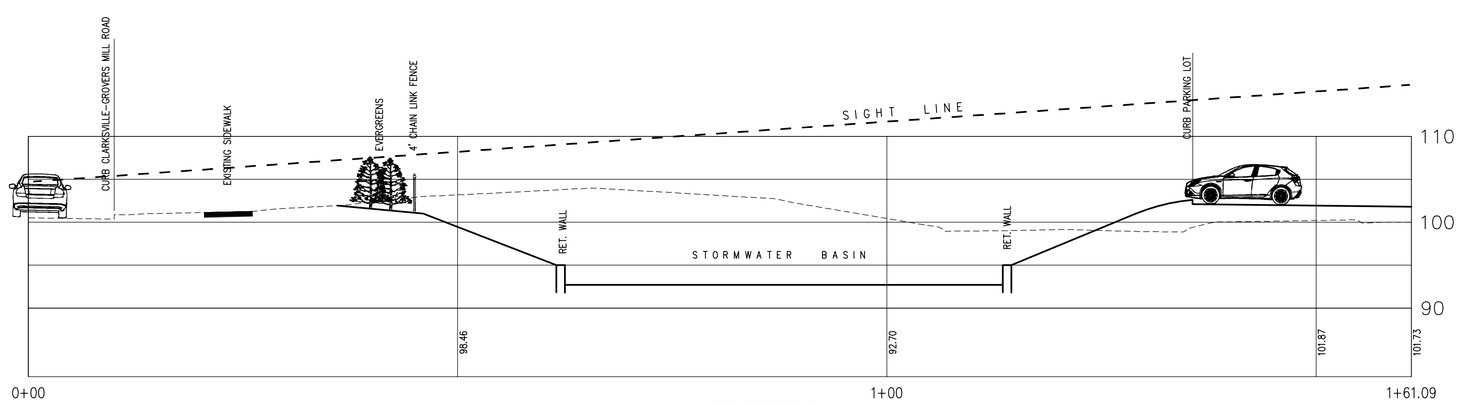

SIGHT LINE A
SCALE: 1"=10'

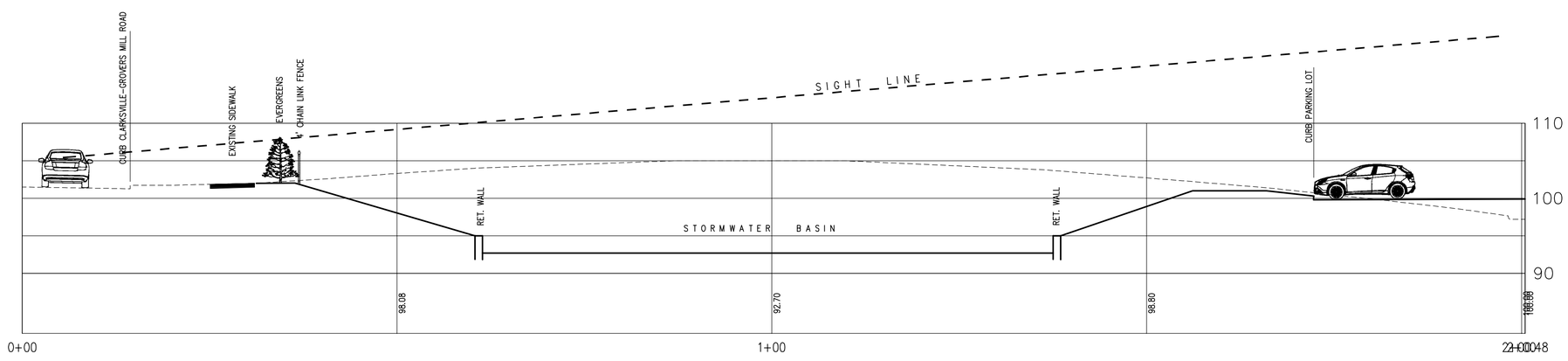

SIGHT LINE B
SCALE: 1"=10'

SIGHT LINES
WEST WINDSOR PLAINSBORO HIGH SCHOOL SOUTH

SCALE:1"=30' MAY 5, 2020

Van Cleef ENGINEERING ASSOCIATES
SOUTHCENTRAL NEW JERSEY OFFICE
4 AAA DRIVE, SUITE 103, HAMILTON, NJ 08691
EMAIL: CONTACTUS@VANCLEEFENGINEERING.COM
WEB: WWW.VANCLEEFENGINEERING.COM
PHONE (609) 689-1100 FAX (609) 689-1120
With Offices In
New Jersey, Pennsylvania & Delaware
Consulting Civil Engineering
Bridge Design
Highway Design
Construction Inspection
Geotechnical Engineering
Water / Wastewater
Municipal Engineering
Land Surveying
Professional Planning
Landscape Architecture
NJ LLC CERT. No. 24GA28132300